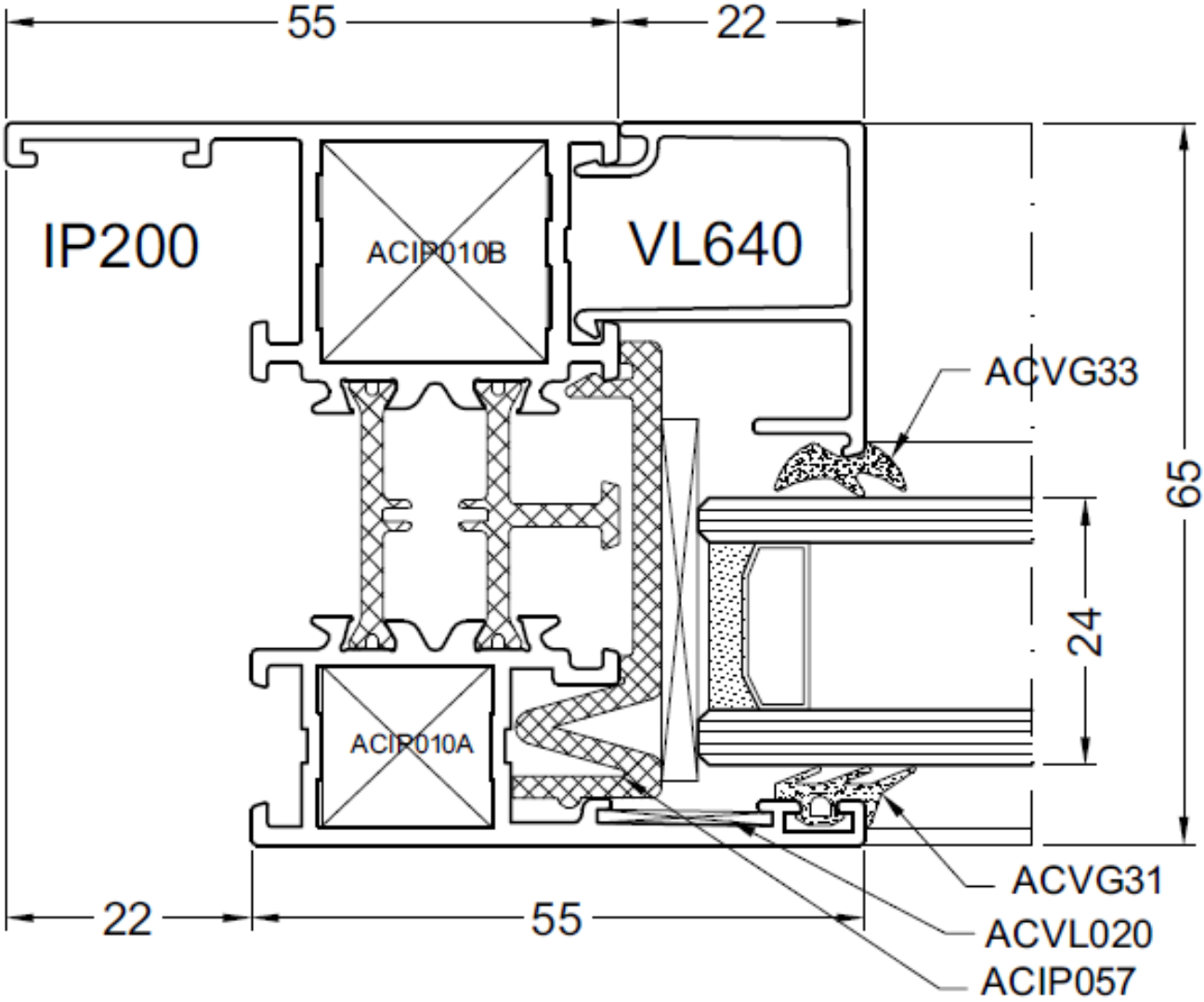tel. 0048 32 726 72 04
www.aikondistribution.com
AIKON DISTRIBUTION